US **INSTALLATION INSTRUCTION - 5th Wheel Trailer Tow Kit**

E **INSTRUCCIONES DE INSTALACION -**

F **INSTRUCTIONS D'INSTALLATION -**

NOTE: When Printing Manual, navigate to print and select “PRINT ACTUAL SIZE”.

Subject to alteration without notice
Sujeto a cambios sin previo aviso
Susceptible de modification sans préavis

ACCESSORIZE YOUR VEHICLE AT: WWW.ACCESSORIES.FORD.COM
OBTENGA LOS ACCESORIOS PARA SU VEHÍCULO EN: WWW.ACCESSORIES.FORD.COM
ACCESSOIRISEZ VOTRE VÉHICULE SUR LE SITE : WWW.ACCESSORIES.FORD.COM

F-SUPER DUTY 2017

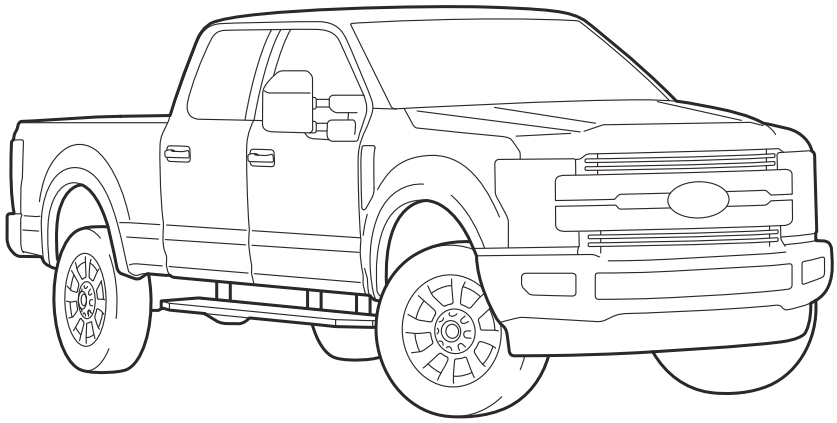

PERSONAL INJURY
DAÑOS PERSONALES
RISQUE DE BLESSURE

VEHICLE DAMAGE
DAÑOS AL VEHÍCULO
DOMMAGE AU VÉHICULE

INCORRECT
INCORRECTO
INCORRECT

CORRECT
CORRECTO
CORRECT

SEE MANUAL
CONSULTAR MANUAL
VOIR LE MANUEL

Components - Componentes - Composants

A

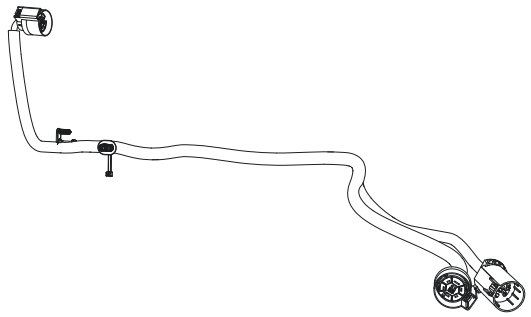

X1

B

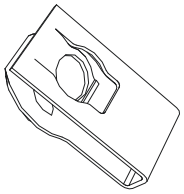

X4

TOOLS REQUIRED
HERRAMIENTAS NECESARIAS
OUTILS NÉCESSAIRES

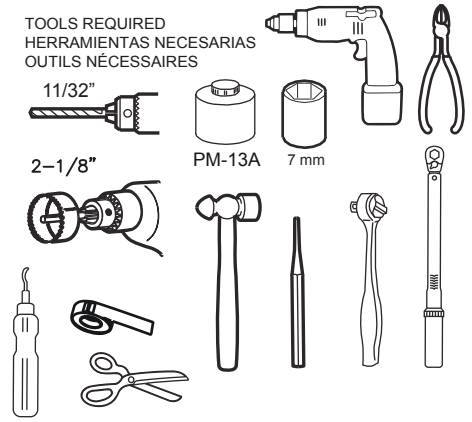

C

X4

D

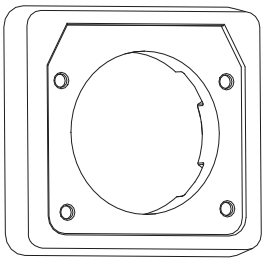

X1

E

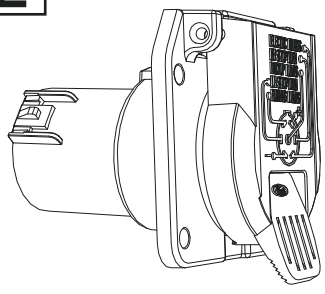

X1

F

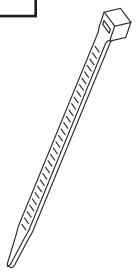

X6

SKHC3J-15A416-AA
© Copyright Ford 2016

1 **NOTE:** When printing the templete, choose to “Print Actual Size”.

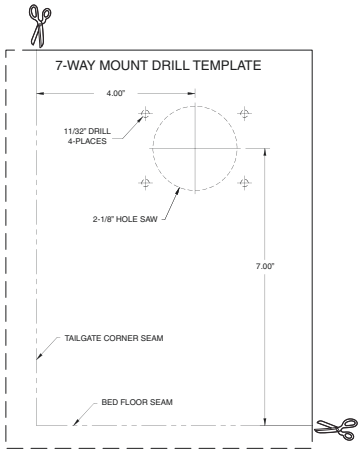

2 **NOTE:** Mask area to be drilled.

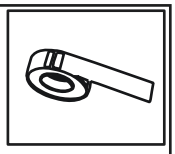

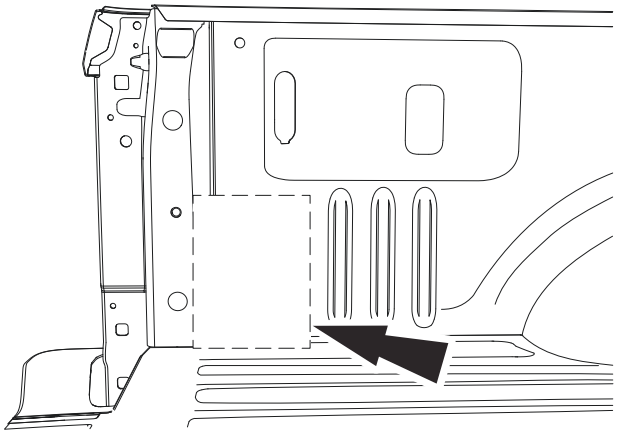

3

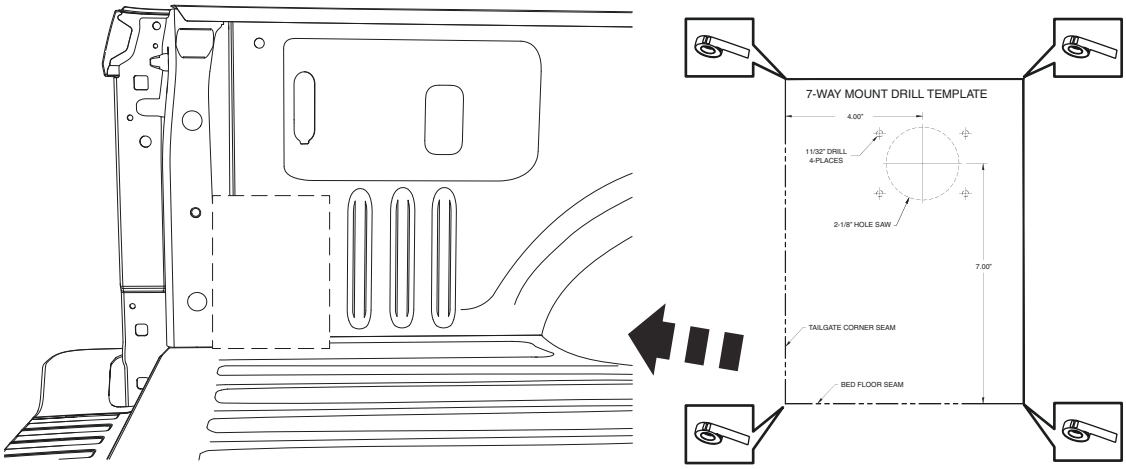

NOTE: After securing the template, verify the center point of the hole on the template measures 7" from the bed floor and 4" from the tailgate. If the measurements do not align, reprint the template and verify "print actual size" has been selected prior to printing.

© Copyright Ford 2016

4

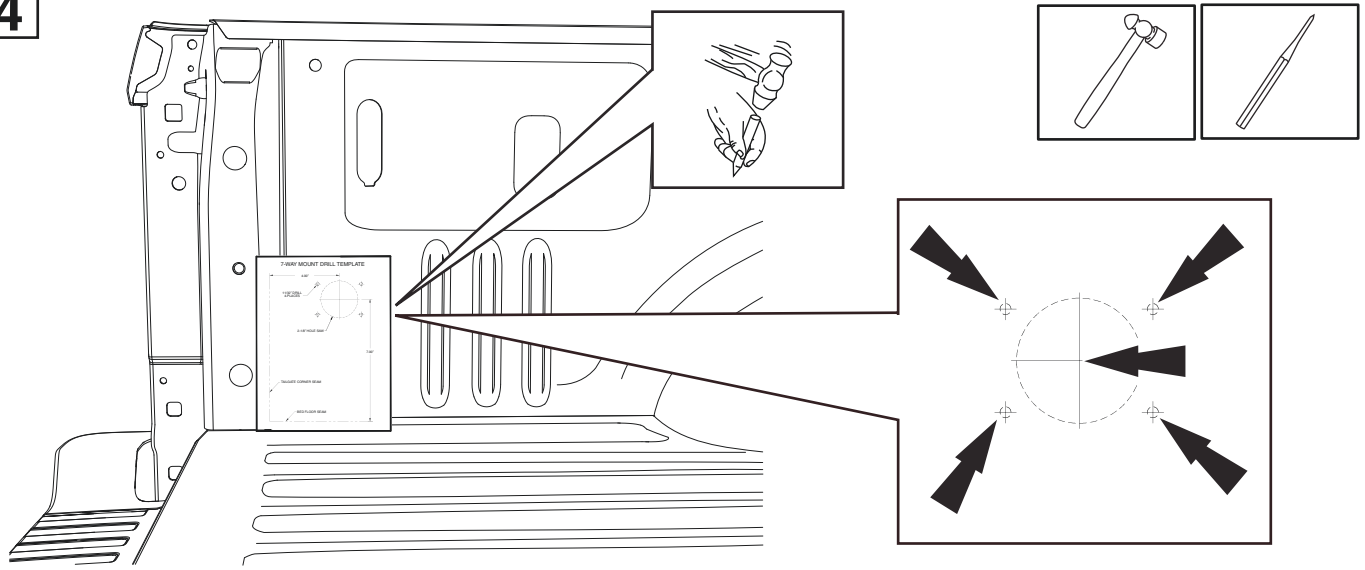

5

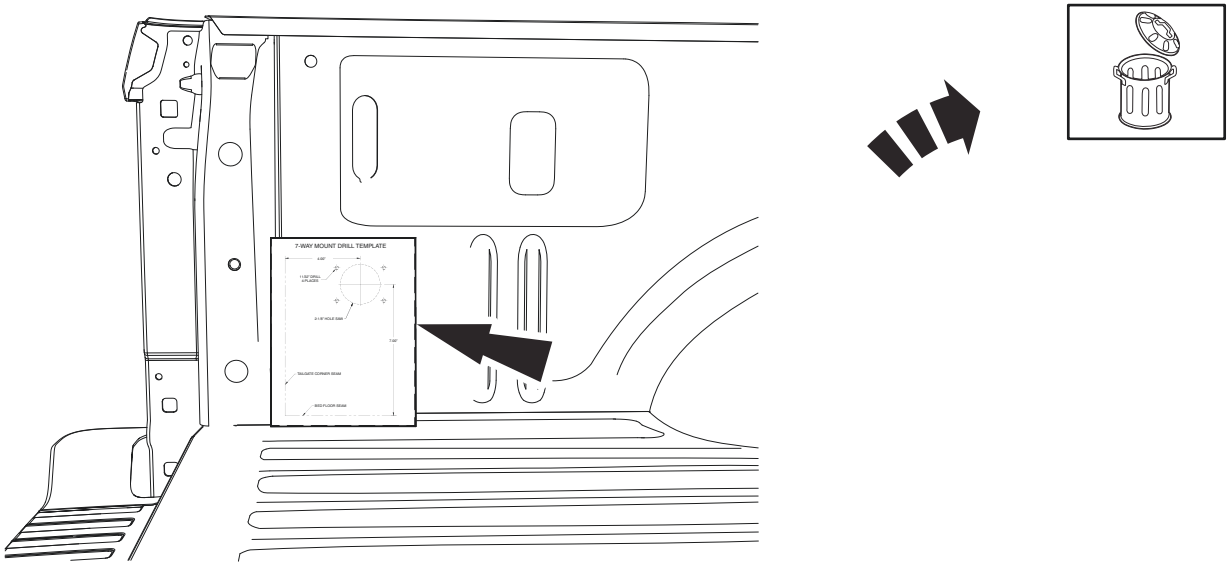

6

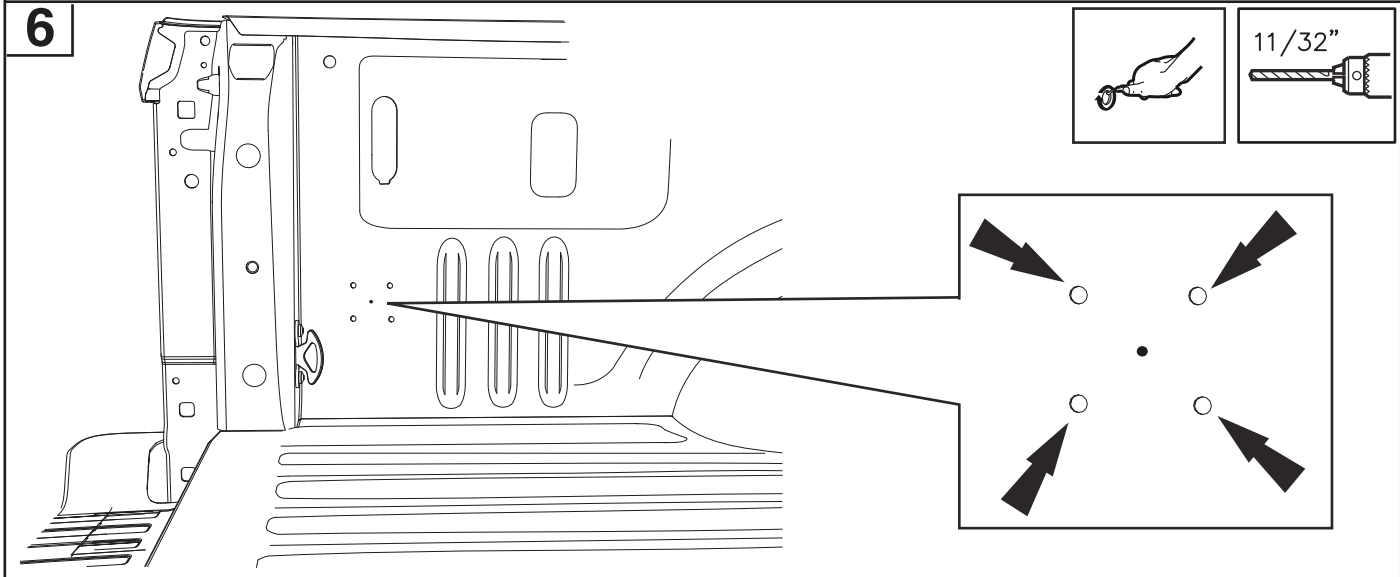

© Copyright Ford 2016

7

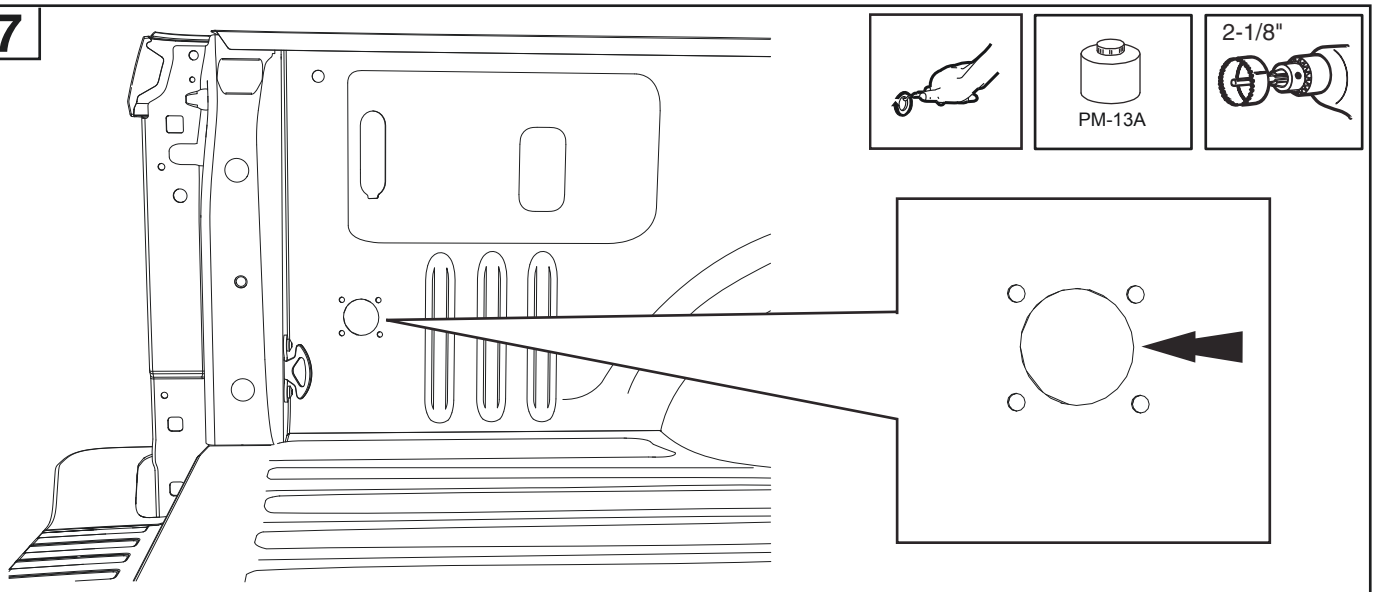

8

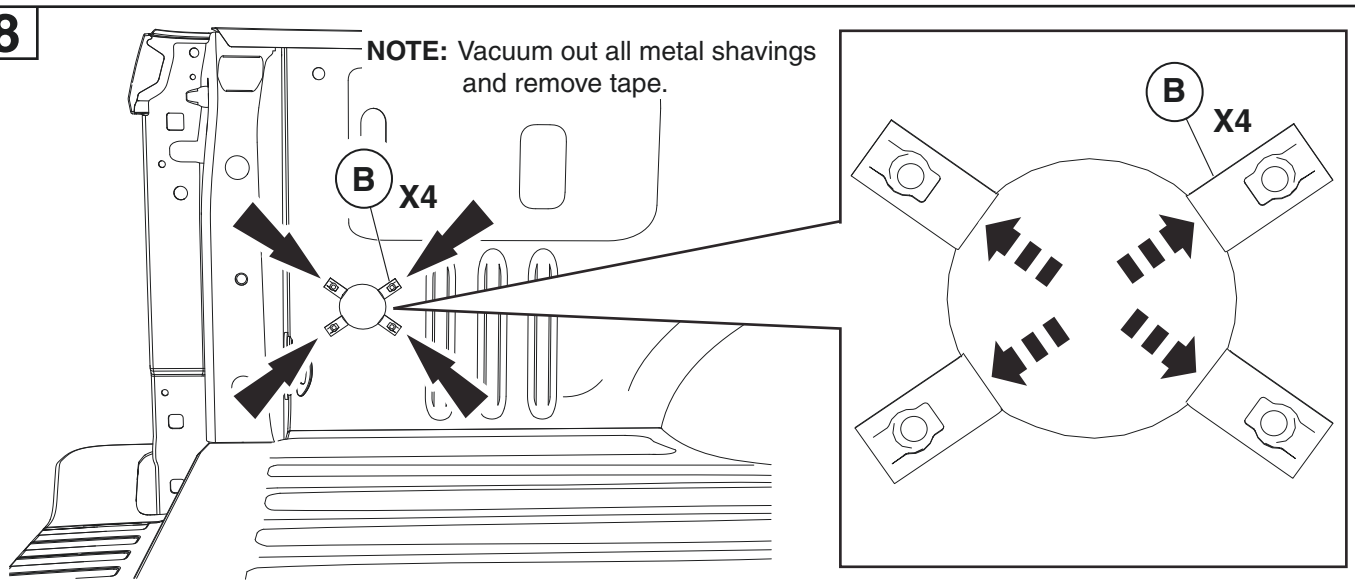

9

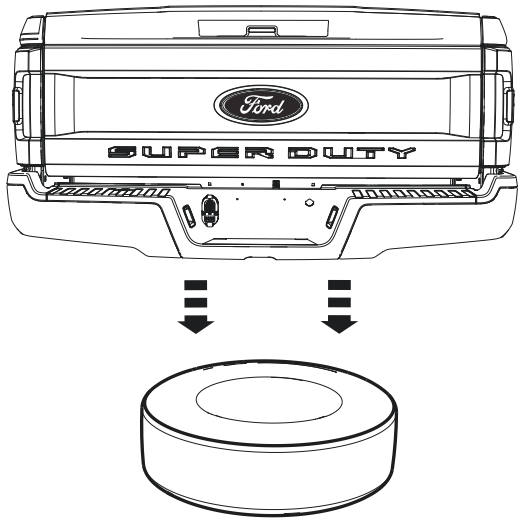

© Copyright Ford 2016

10

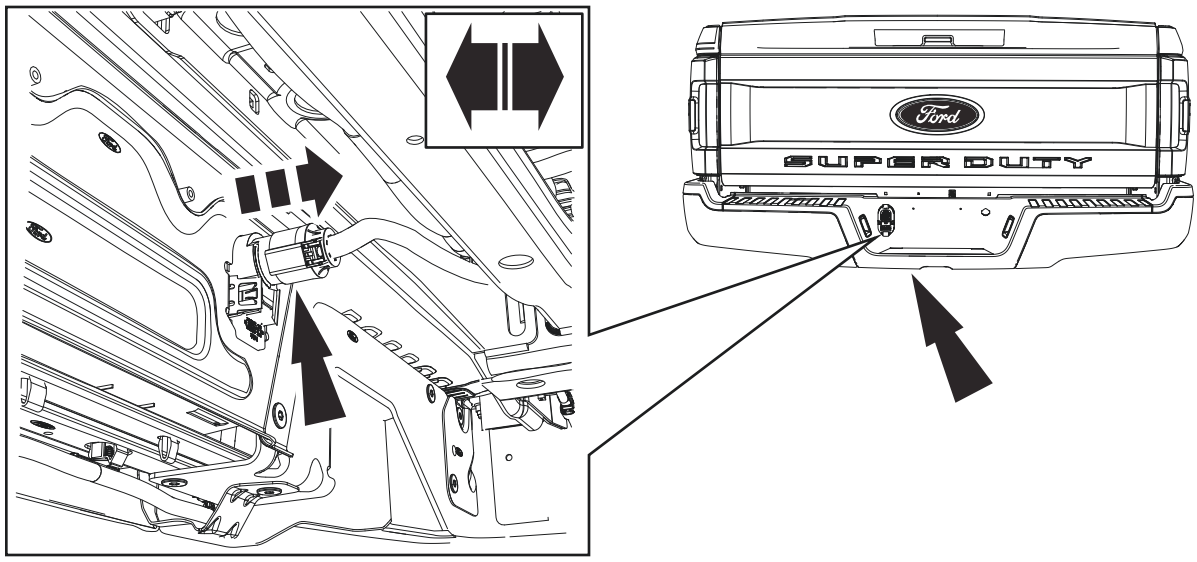

11

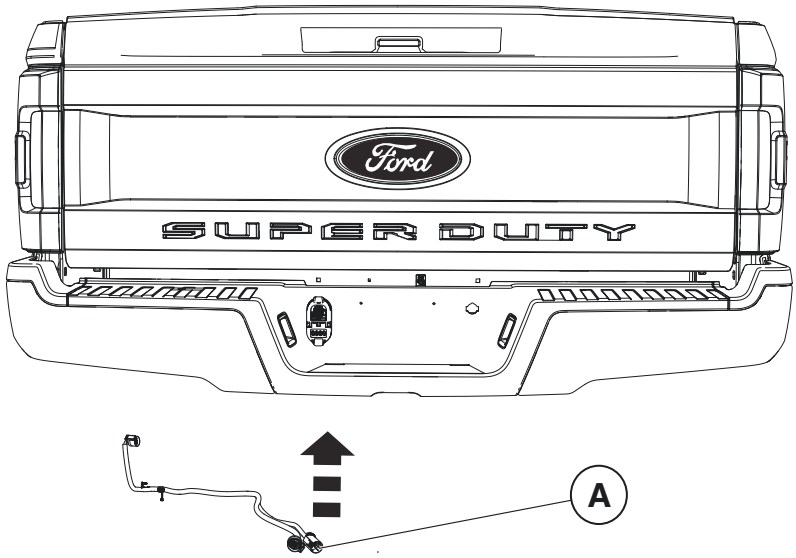

12

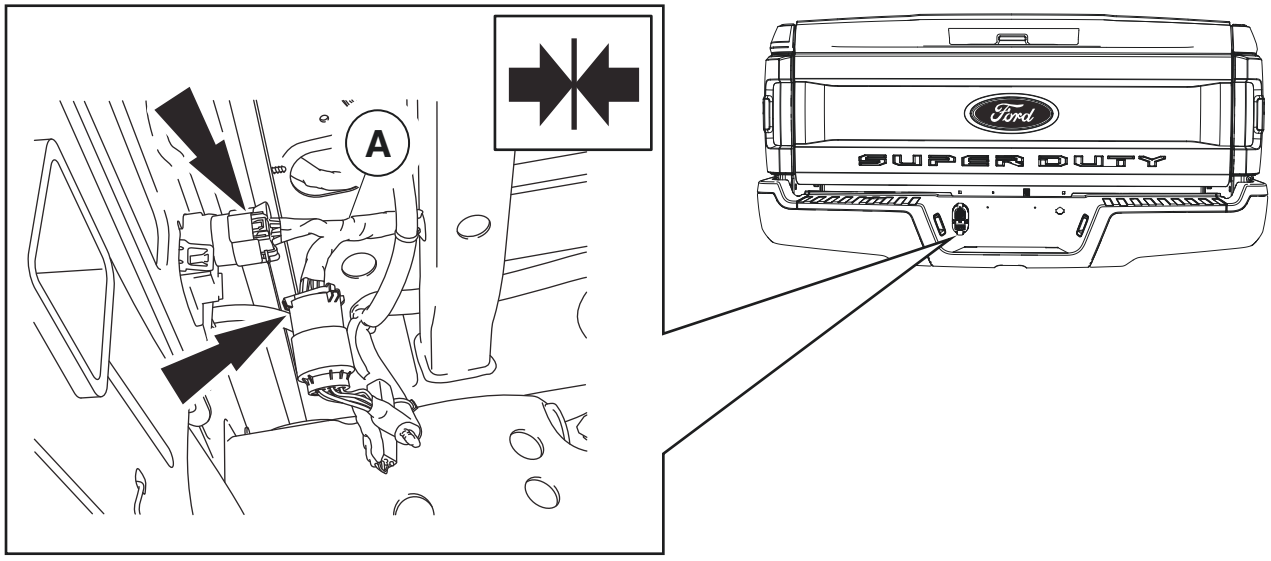

© Copyright Ford 2016

13

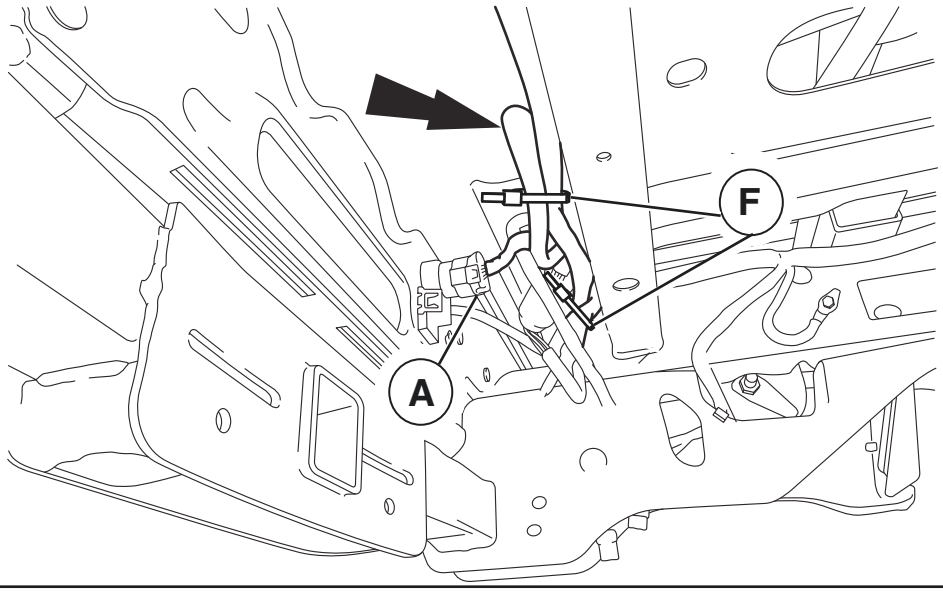

14

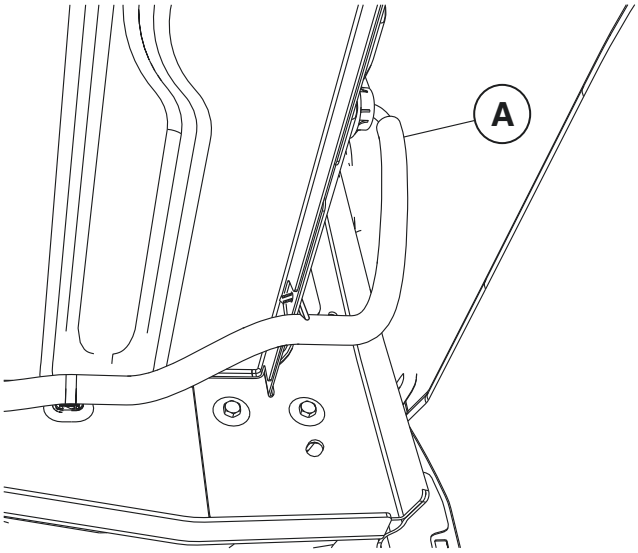

REAR OF VEHICLE

15

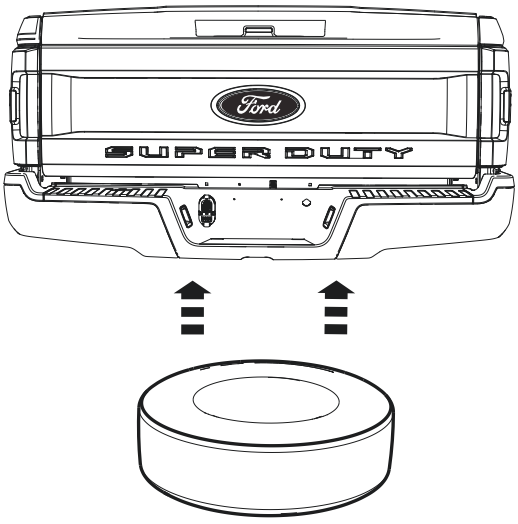

© Copyright Ford 2016

16

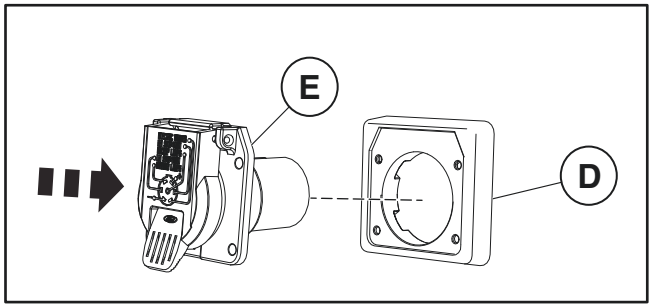

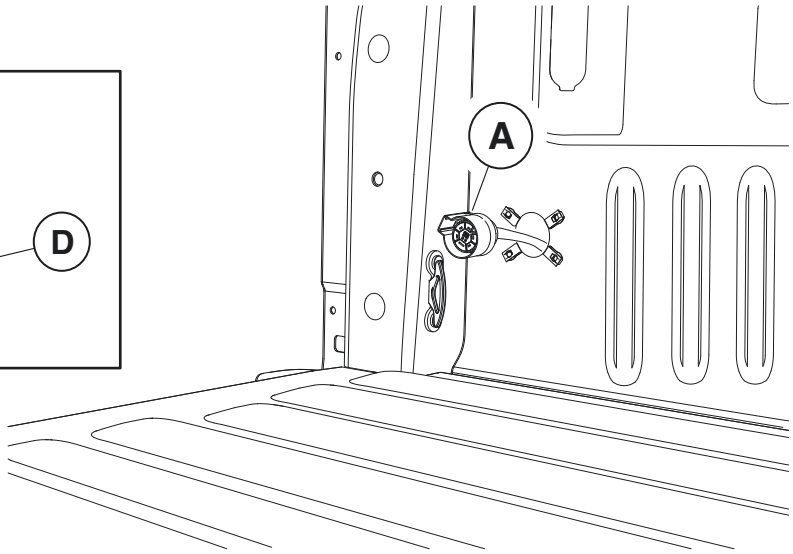

17

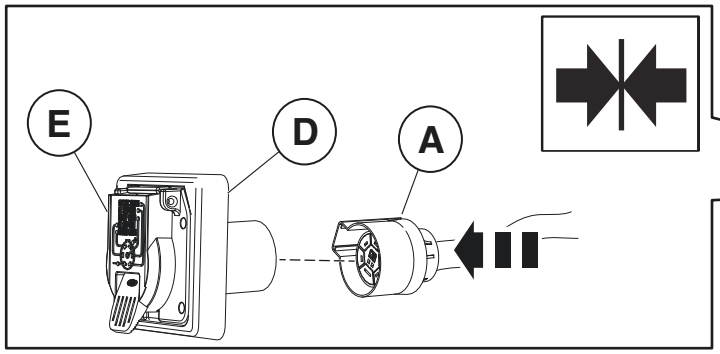

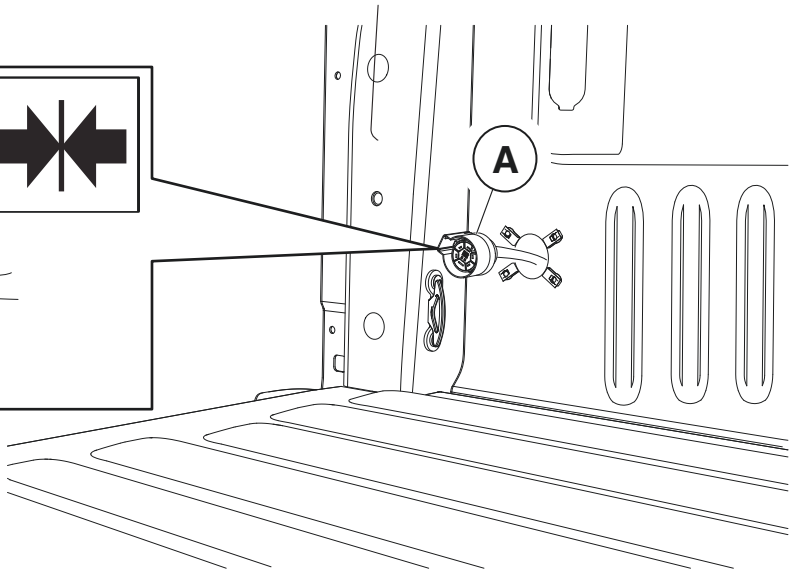

18

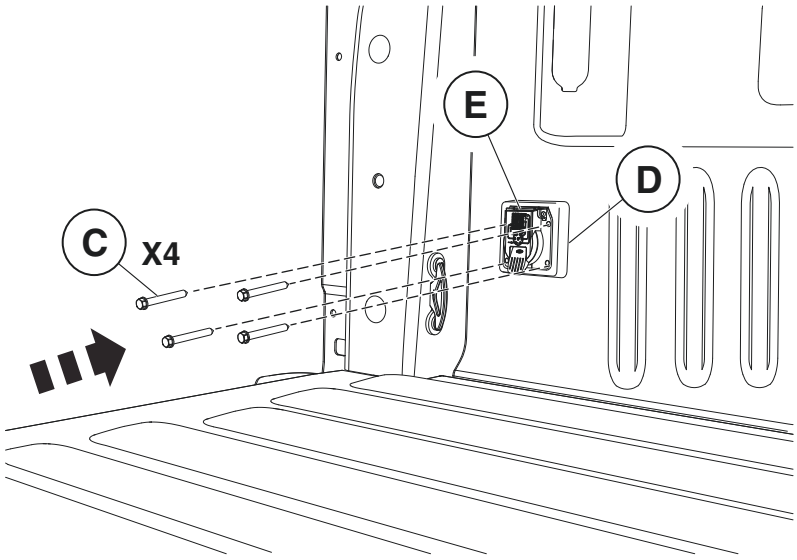

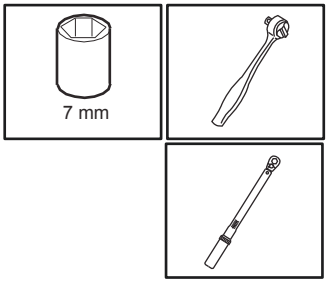

1.1 Nm (10 lb-in)

© Copyright Ford 2016

Congratulations!

You've purchased a Genuine Ford Brand Accessory designed, engineered, and built specifically for your Ford vehicle. We have made every effort to ensure that this 5th wheel tow harnest kit is top quality in terms of fit, durability, finish and ease of installation.

At Ford Customer Service Division, customer satisfaction is our number one priority!

¡Felicidades!

¡En la División de servicio al cliente de Ford, la satisfacción del cliente es nuestra máxima prioridad!

Félicitations !

La satisfaction du client est la priorité numéro un du service clientèle de Ford !

Ford Customer Service Division

Accessorize your vehicle at: www.accessories.ford.com

© Copyright Ford 2016

7–WAY MOUNT DRILL TEMPLATE

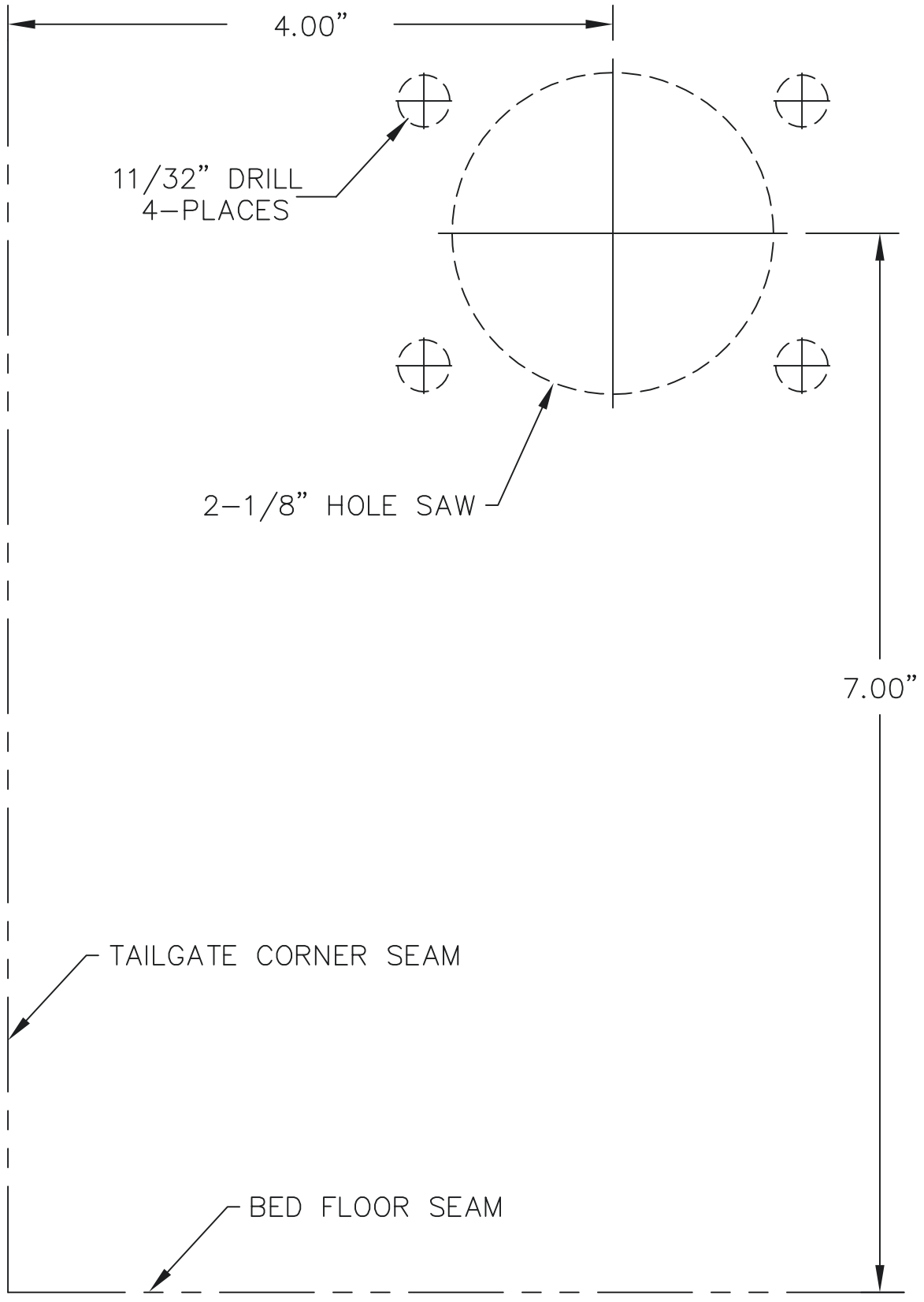

*VERIFY DIMENSIONS (4.00" & 7.00") ARE PRINTED TO SCALE.